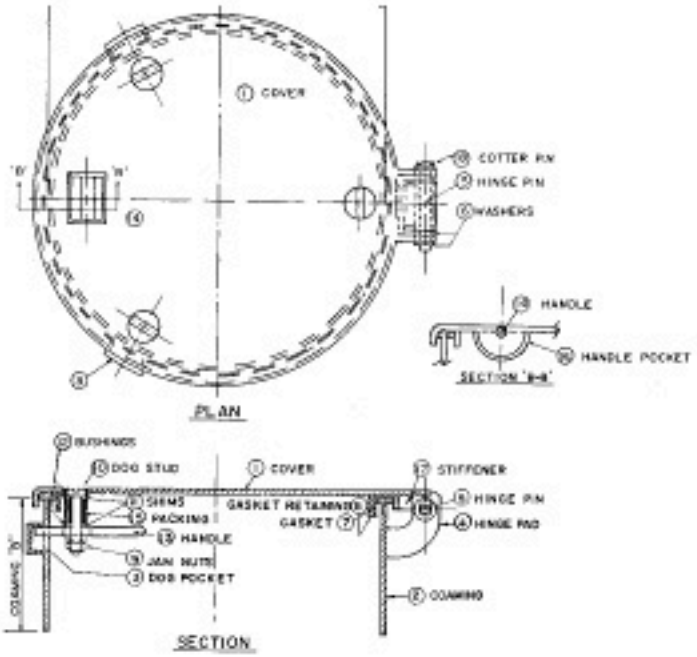

BYRNE, RICE & TURNER, INC.
NEW ORLEANS, LOUISIANA
WATERTIGHT RAISED SCUTTLE - FLUSH COVER
DRAWING NO. 408

Byrne, Rice & Turner
www.BRTMarine.com
800-725-3787